MEMS Inertial Measurement Unit V 2.10.

IMU200B-A0 IMU

Product characteristics

- Gyroscope measuring range: 500 ~ 2000 °/s optional
- 5 °/H gyroscope bias stability (Allan variance)
- Acceleration range: 16g
- 0.2 mg acceleration bias stability (Allan variance)

Field of application

UAV Navigation Robot Na UV Navigation

Various air carriers flight na and vehicle navigatio vigation

©COPYRIGHT 2013,FIREPOWER TECHNOLOGY.

oscar@firepowertec.com www.firepowertec.com
FirePower Building, Building 3, Huafeng Technology Industrial Park, Fuyong, BaoAn District, SZ

Specifications subject to change without notice

1. Product overview

The IMU200B-A0 is an inertial measurement unit (IMU) based on micromachining technology (MEMS) with built-in high-performance MEMS gyroscope and MEMS accelerometer, which outputs 3 angular velocities and 3 accelerations. The utility model has the advantages of high reliability and strong environmental adaptability. By matching different software, the product can be widely used in tactical and industrial UAV, smart ammunition, seeker and other fields.

2. Product features

1) Three-axis digital gyroscope:

A) ± 500°/s (Max: 2000 °/s) dynamic measurement range;

B) Zero bias stability: 20 °/H (GJB, 10s), 5 °/H (ALLAN);

2) Triaxial digital accelerometer:

A) ± 16 G dynamic measuring range;

B) Bias stability: 1mg (GJB, 10s), 0.2: mg (ALLAN);

3) High reliability: MTBF > 20000h;

4) Guaranteed accuracy within the full temperature range (-40 ℃ ~ 80 ℃): built-in high-performance temperature calibration and compensation algorithm;

5) Suitable for working under strong vibration conditions

6) Overload resistant up to 20000 G

7) Interface 1-way RS422

8) National production design

3. Product indicators

Parameter			Test conditions	Typical value			Unit
Angular velocity	Range		Turntable	500	1000	2000	°/s
	Zero bias	Stability	10 s average, + 70 ℃,	20	30	40	°/h
			Allan variance, + 20 ℃	5	7.5	10	°/h
		Zero-bia	-40 ℃ ~ + 70 ℃,	0.04	0.06	0.08	°/s
		Zero	Life-cycle change,	0.15	0.22	0.3	°/s
	Scale fact	Non-line	+20℃	200	300	400	ppm
		Full	1℃/min、1σ	400	600	800	ppm
		Scale	Life-cycle change,	300	4500	6000	ppm

©COPYRIGHT 2013,FIREPOWER TECHNOLOGY.

oscar@firepowertec.com www.firepowertec.com
FirePower Building, Building 3, Huafeng Technology Industrial Park, Fuyong, BaoAn District, SZ

Parameter			Test conditions	Typical value			Unit
	Acceleration			8	12	16	°/h/g
	Resolution			0.02	0.03	0.04	°/s
	Random walk			0.4	0.6	0.8	°/√hr
	Noise density			0.00	0.012	0.01	°/s/√Hz
	Bandwidth		3dB	200			Hz
	Data delay		Excluding	5ms			ms
Acceleration	Range			16			g
	Zero bias	Stability	10 s average, + 70 ℃,	1			mg
			Allan variance, + 20 ℃	0.2			mg
		Zero-bia	-40 ℃ ~ + 70 ℃,	1.6			mg
		Zero	Life-cycle change,	5			mg
	Scale fact	Non-line	+20℃	200			ppm
		Full	After full temperature	400			ppm
		Scale	Life-cycle change,	3000			ppm
	Bandwidth		3dB	200			Hz
	Resolution			0.16			mg
	Data delay		Excluding	5ms			ms
Start time			Time from power-on	500			ms
Reset time			Time from reset to	500			ms
			Time from reset to	300			ms
3 gyro axes and 3			+70℃、+20℃、-40℃	0.05			°
Power supply				5±0.1			V
Power consumption				0.8			W
Communication update			1-way RS422	500			Hz
Communication baud rate			1-way RS422	921.6 (Max.)			kbps

©COPYRIGHT 2013,FIREPOWER TECHNOLOGY.

oscar@firepowertec.com www.firepowertec.com
FirePower Building, Building 3, Huafeng Technology Industrial Park, Fuyong, BaoAn District, SZ

Specifications subject to change without notice

4. Electrical interface

Color	Name	Type	Description
Red	5V	Power source	
Black	GND	Power source	
White	R+	Input	RS422
Brown	R-	Input	
Green	T-	Output	
Yellow	T+	Output	
Orange	Spare		
Blue	Spare		

5. Fabric interface

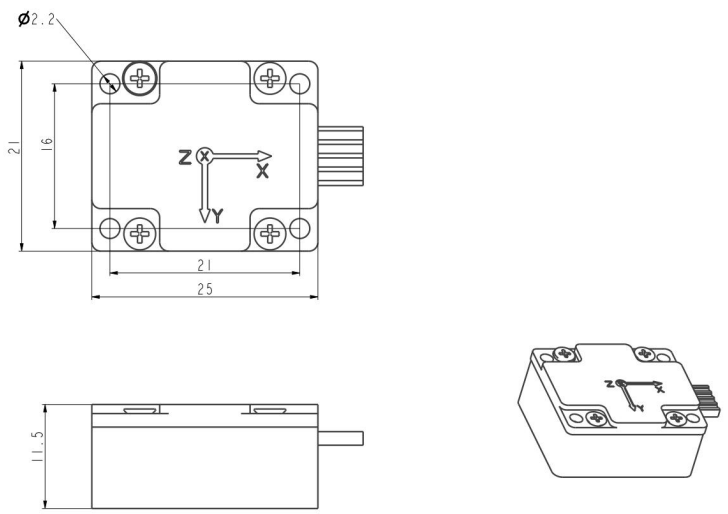

Fig. 1 Schematic diagram of structure outline

6. Instructions for use

6.1 UART read-write data

6.1.1 interface

Default configuration: 460800bps, 8 data bits, 1stop bit, no parity;

6.1.2 configuration commands

1) $GPENB

   Enable UART power-on automatic output

2) $GPDIS

   Close UART power-on automatic output

©COPYRIGHT 2013,FIREPOWER TECHNOLOGY.

3) $GPSER

View the serial number

4) $GPINF

View configuration information

6.1.3 protocol format

A protocol head, a protocol body and a protocol tail; 500Hz; The coordinate axis is defined as front right down.

Agreeme	Byte	Data	Unit	Data	Remark
Protocol header	0	0x5a			
	1	0x5a			
Protocol body	2~5	X-axis	°/s	float	
	6~9	Y-axis	°/s	float	
	10~13	Z-axis	°/s	float	
	14~17	X-axis	g	float	
	18~21	Y-axis	g	float	
	22~25	Z-axis	g	float	
	26~29	Spare			
	30~33	Spare			
	34~37	Spare			
	38~41	Spare			
	42~45	Spare			
	46~49	Temperat	℃	float	
	50~53	Spare			
	54~57	Spare			
End of	58	Checksum			Accumulate and sum 2

©COPYRIGHT 2013,FIREPOWER TECHNOLOGY.

7. Update the record

Seria	Versio	Change	Before	After the change	Reason for	Change
1	2.01	20221216		National		Zzy
2	2.10	20230610		Model changed to SNC200B-A0-IMU	Customer needs	Charles

©COPYRIGHT 2013,FIREPOWER TECHNOLOGY.

oscar@firepowertec.com www.firepowertec.com
FirePower Building, Building 3, Huafeng Technology Industrial Park, Fuyong, BaoAn District, SZ

Specifications subject to change without notice